05100500 - LT-A BMT65 ER32-F L-R H90 K-W

Type	LT-A Tool holder angle 90°
Mounting	BMT 65
Tool output	Collet nut ER 32 F - internal nut
Coolant	External coolant
Direction of rotation	r1 r2
Max speed [rpm]	6000
Max torque [Nm]	63
Ratio	1:1
H [mm]	90
H1 [mm]	38
Accessories	N.A.
Notes	N.A.
Mounting tips	Not suitable for every application, please check

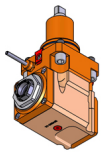

Always check live tool dimensions on the turret

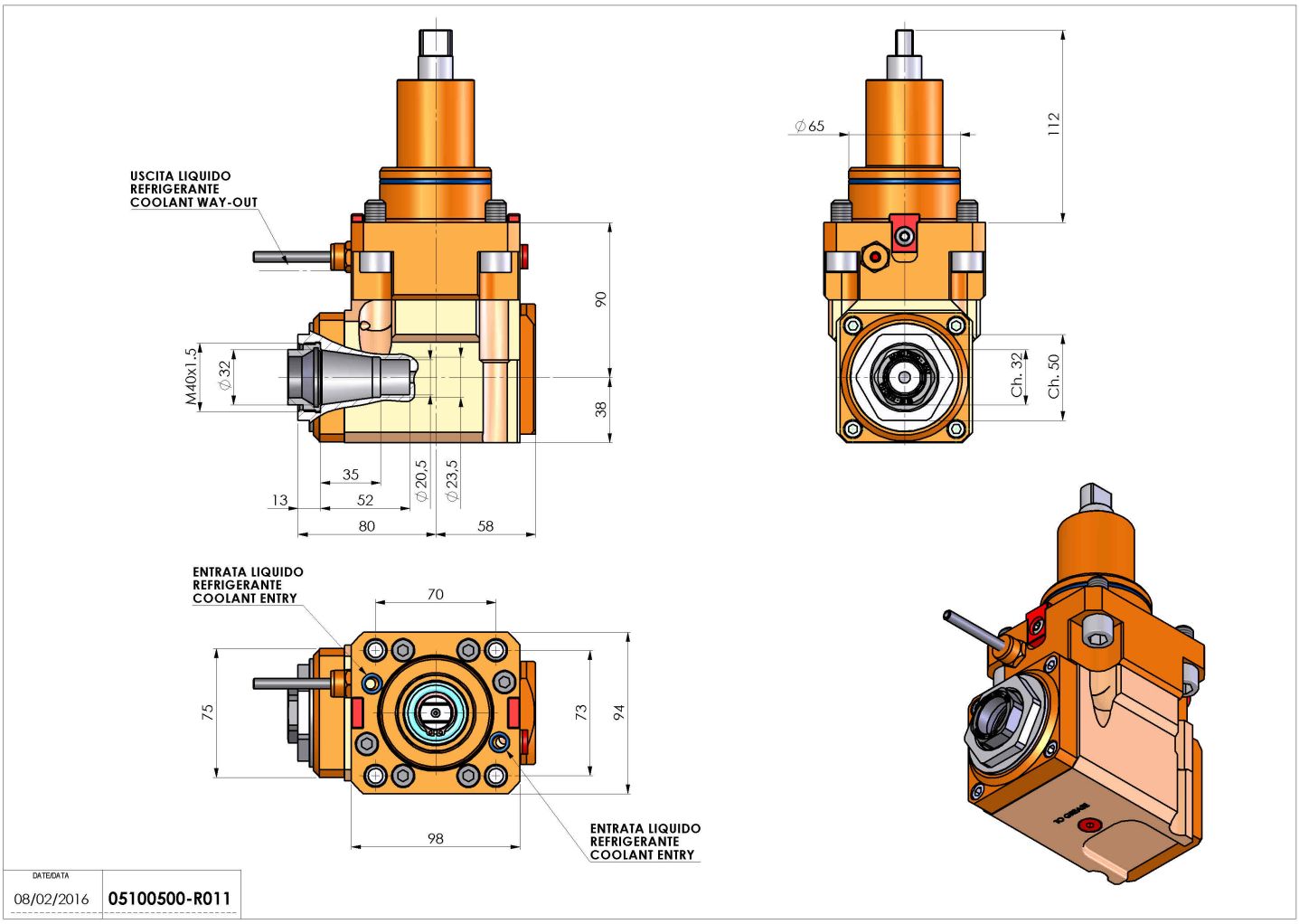

Subject to technical changes