05013100 - LT-A D65 ER32F LR H65 NK

Type	LT-A Tool holder angle 90°
Mounting	CYLINDRICAL SHANK 65
Tool output	Collet nut ER 32 F - internal nut
Coolant	External coolant
Direction of rotation	r1 r2
Max speed [rpm]	6000
Max torque [Nm]	63
Ratio	1:1
H [mm]	65
H1 [mm]	38
Accessories	N.A.
Notes	N.A.
Mounting tips	Not suitable for every application, please check

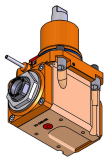

Always check live tool dimensions on the turret

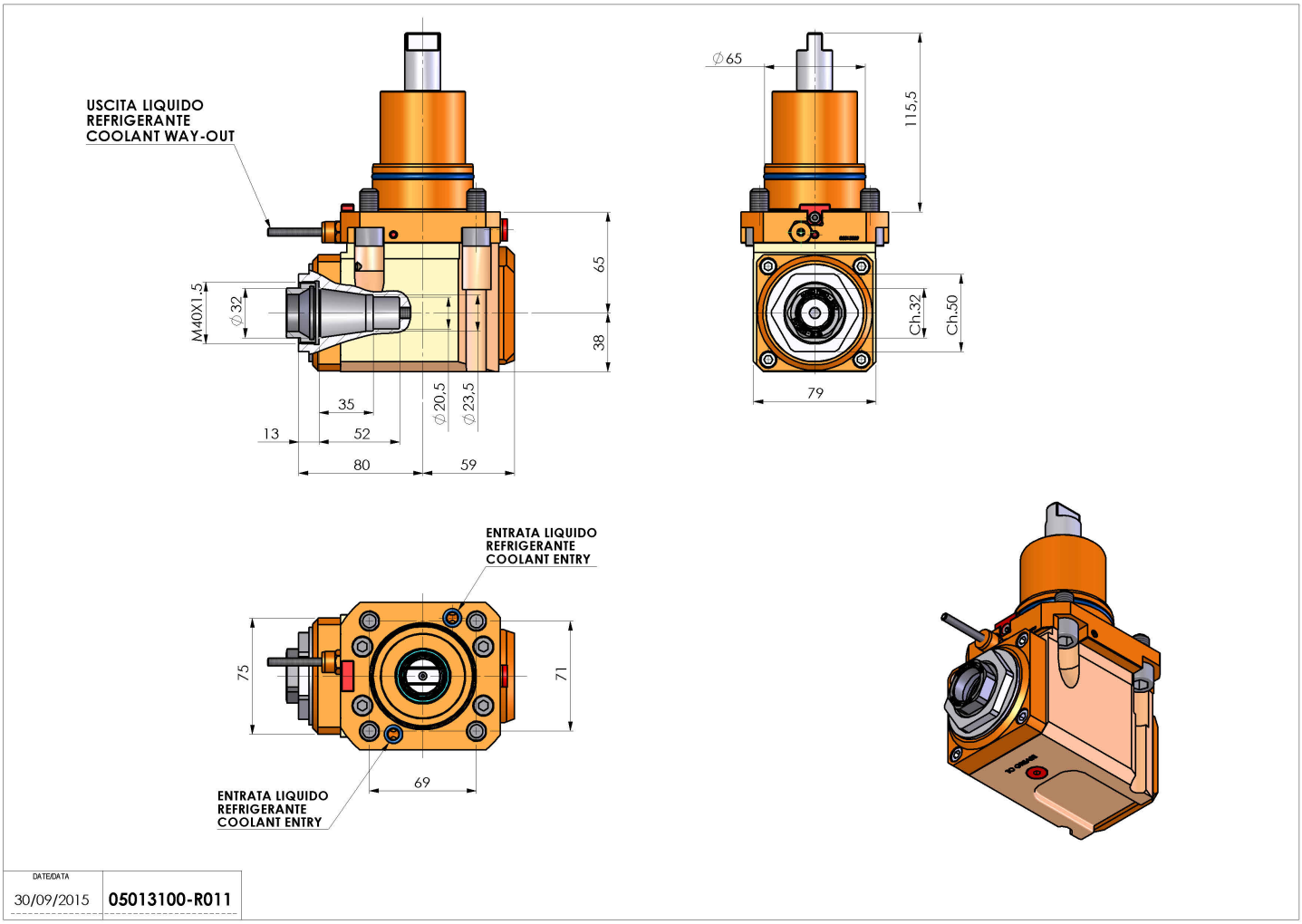

Subject to technical changes