05290500 - LT-A D32 ER32 HRFHS H55

Type	LT-A Tool holder angle 90°
Mounting	CYLINDRICAL SHANK 32
Tool output	Collet nut ER 32
Coolant	HP Internal coolant
Direction of rotation	r1 r2
Max speed [rpm]	12000
Max torque [Nm]	70
Ratio	1:1
H [mm]	55
H1 [mm]	37
Max pressure [bar]	80
Accessories	N.A.
Notes	N.A.
Mounting tips	Not suitable for every application, please check

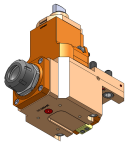

Always check live tool dimensions on the turret

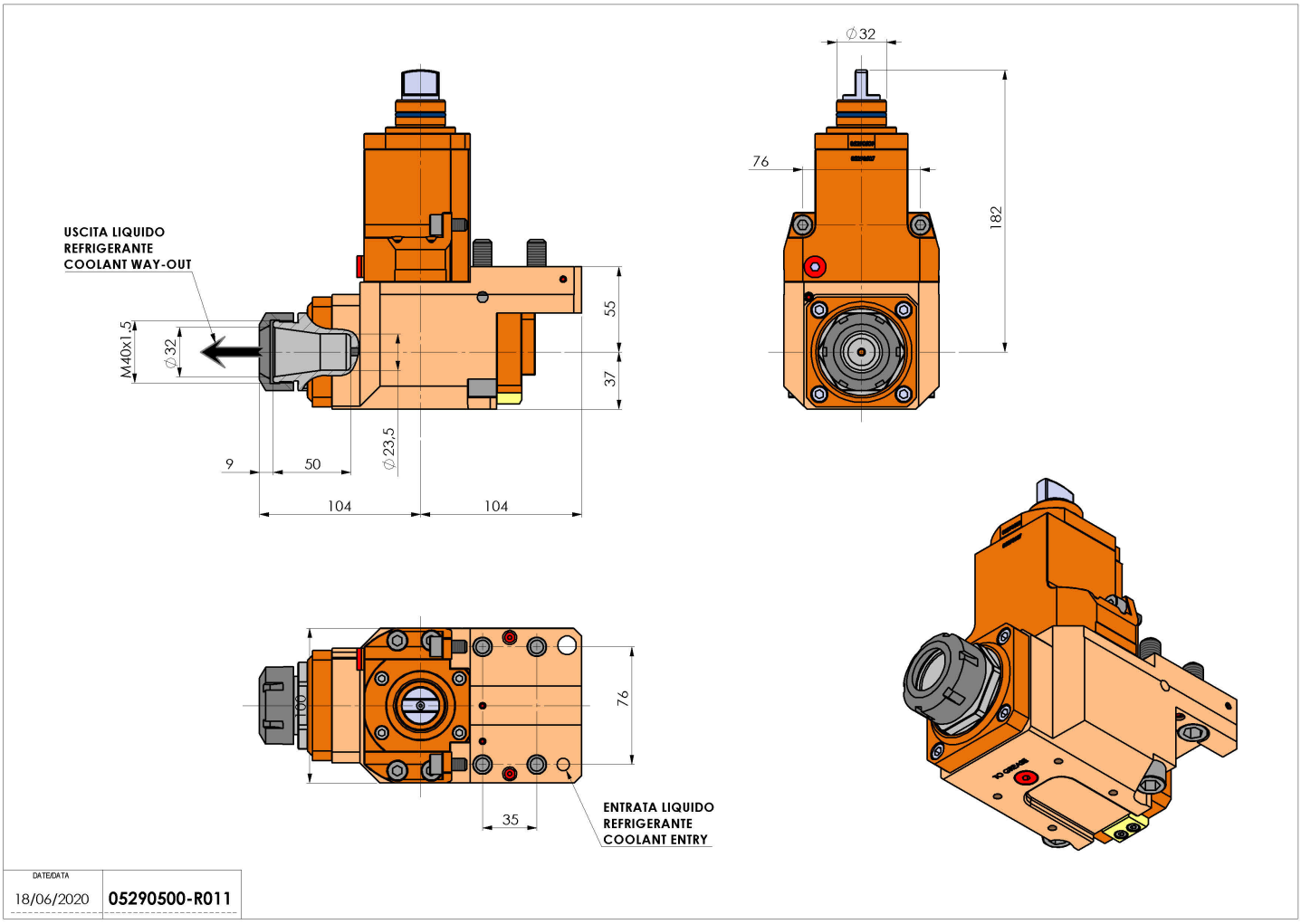

Subject to technical changes