05164100 - LT-S D40 ER25 OFS72 LR H108 MU

Type	LT-S OFS Tool holder straight offset
Mounting	CYLINDRICAL SHANK 40
Tool output	Collet nut ER 25
Coolant	External coolant
Offset [mm]	72
Direction of rotation	r1 r2
Max speed [rpm]	6000
Max torque [Nm]	50
Ratio	1:1
H [mm]	108,5
Accessories	N.A.
Notes	N.A.
Mounting tips	Not suitable for every application, please check

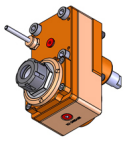

Always check live tool dimensions on the turret

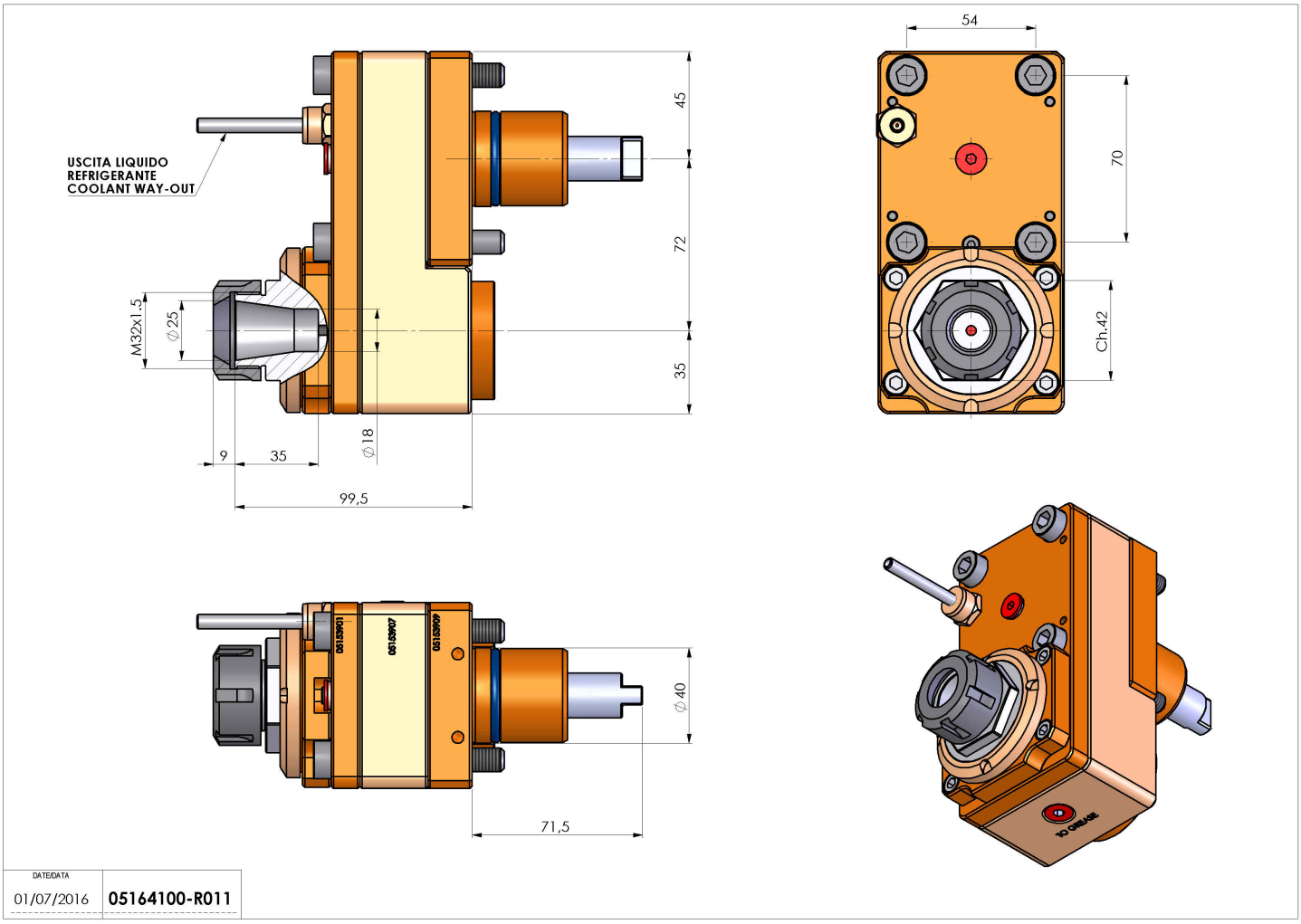

Subject to technical changes