05075800 - LT-S D55 ER25F OF72 H86 BI

Type	LT-S OFS Tool holder straight offset
Mounting	CYLINDRICAL SHANK 55
Tool output	Collet nut ER 25 F - internal nut
Coolant	External coolant
Offset [mm]	72
Direction of rotation	r1 r2
Max speed [rpm]	6000
Max torque [Nm]	50
Ratio	1:1
H [mm]	86,5
Accessories	N.A.
Notes	N.A.
Mounting tips	Not suitable for every application, please check

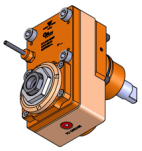

Always check live tool dimensions on the turret

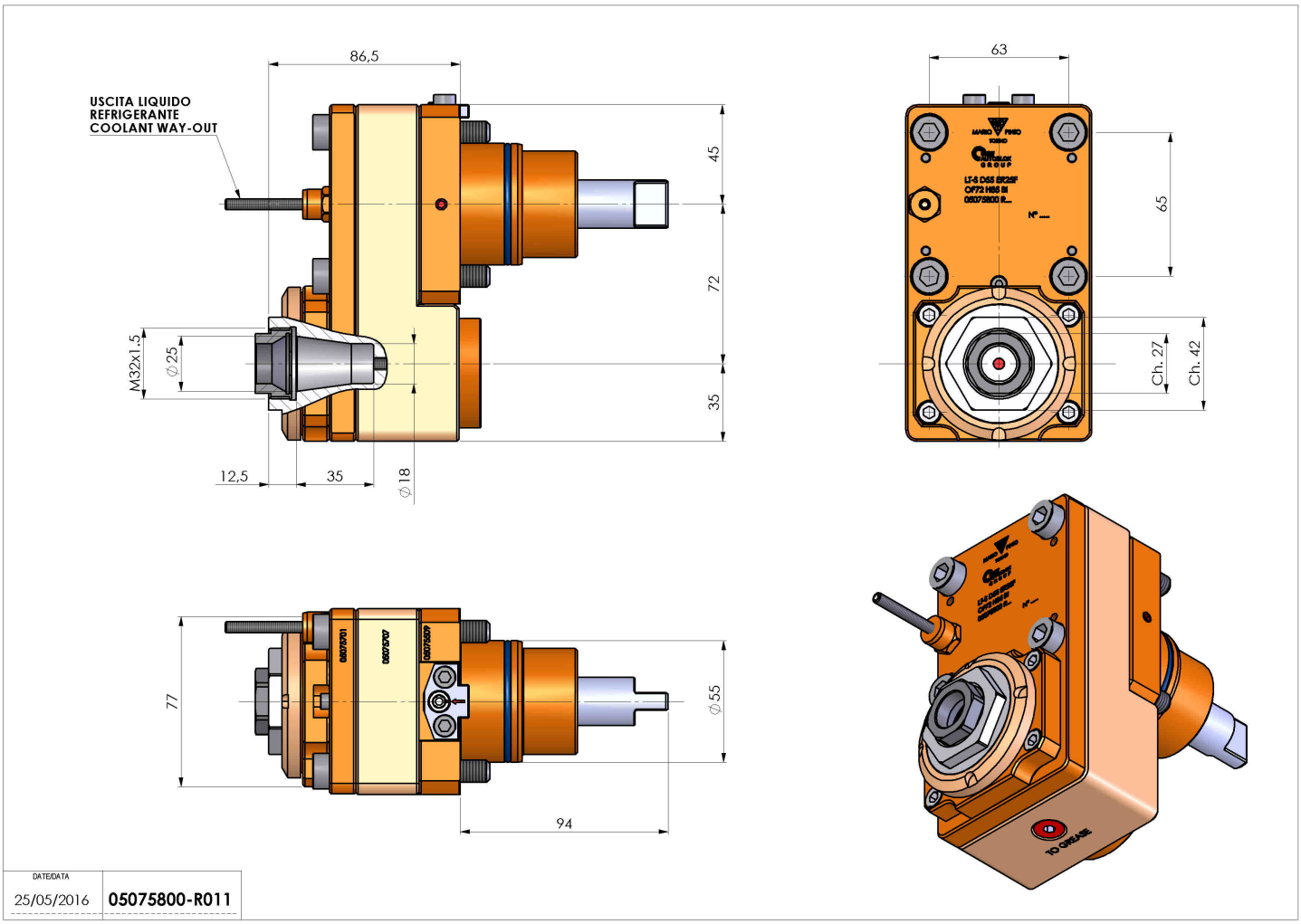

Subject to technical changes