# 05047200 - LT-S D60 ER32F OF76RF 1:1 H106

| | |
|---|---|
| **Type** | LT-S OFS<br>Tool holder straight offset |
| **Mounting** | CYLINDRICAL SHANK 60 |
| **Tool output** | Collet nut ER 32 F - internal nut |
| **Coolant** | Internal coolant |
| **Offset [mm]** | 76 |
| **Direction of rotation** | r1 r2 |
| **Max speed [rpm]** | 6000 |
| **Max torque [Nm]** | 40 |
| **Ratio** | 1:1 |
| **H [mm]** | 106 |
| **Accessories** | N.A. |
| **Notes** | N.A. |
| **Mounting tips** | Not suitable for every application, please check |

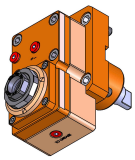

Always check live tool dimensions on the turret

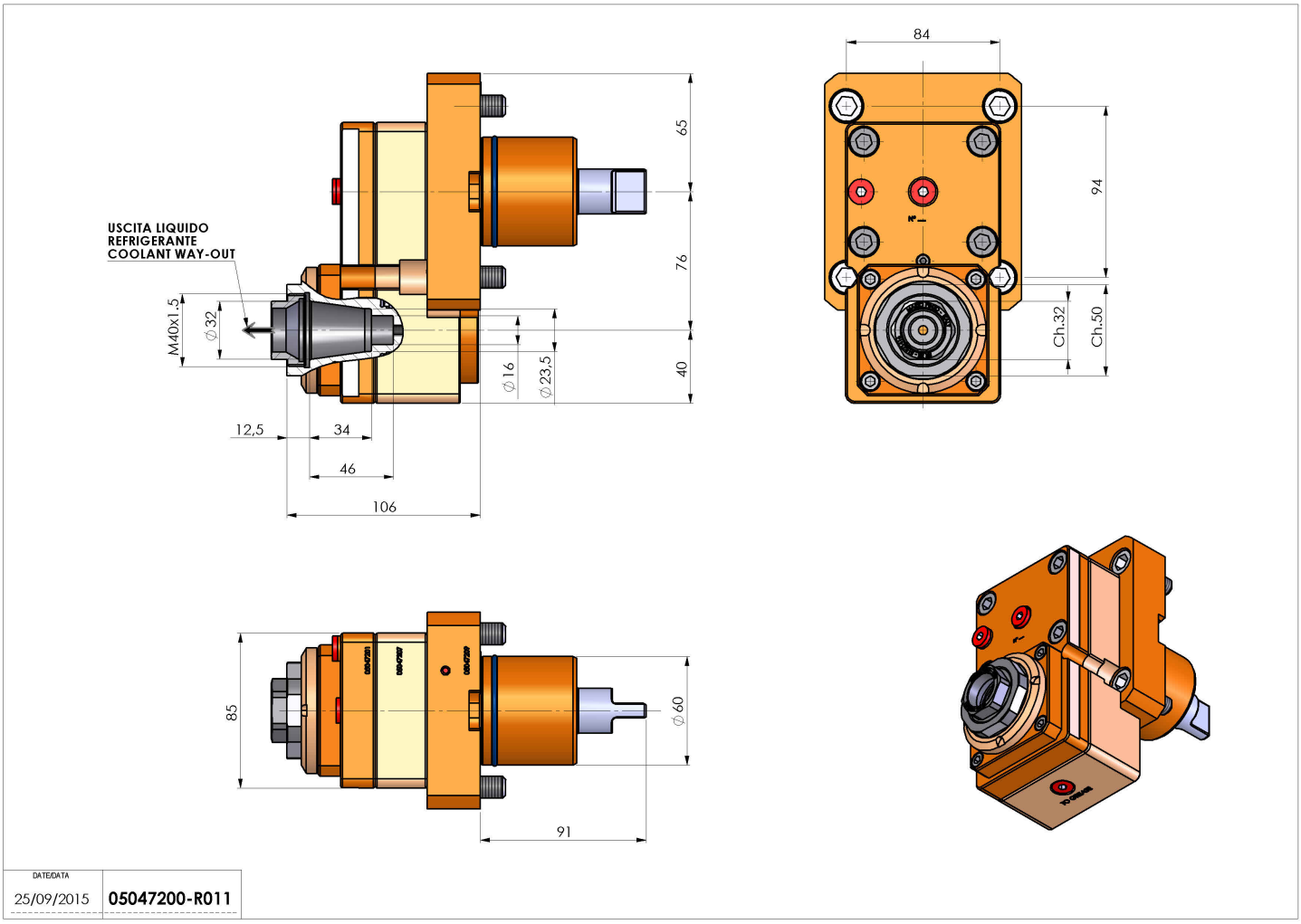


**Subject to technical changes**